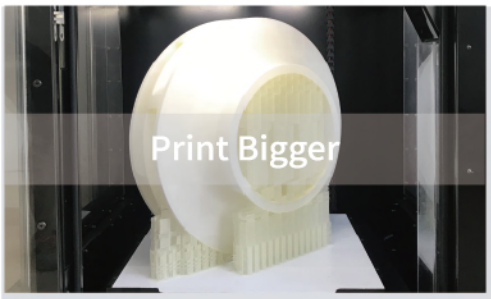

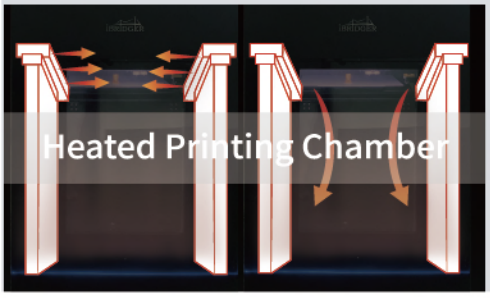

i340

Industrial FDM 3D Printer
445x430x585mm

iBRIDGER

Print Multiple Filaments

PEEK, PETG, PA6+CF, PA6+GF, ABS, PC, PA6/66, PLA, ASA, TPU, PVA, HIPS…
Open to 3rd party fliaments

Advanced Thermal System

Nozzle temperature: max. 410 °C
Heated filament bin: max. 75°C
Heated bed: PID control, max. 160°C
Print chamber: PID control, max. 90°C

High Compatibility

i340 support a variety of materials, like PEEK, ABS, PETG, ASA, TPU, PC, PA, carbon fiber filled or glass fiber filled materials and dissolvable support materials.

PEEK

PA6-CF

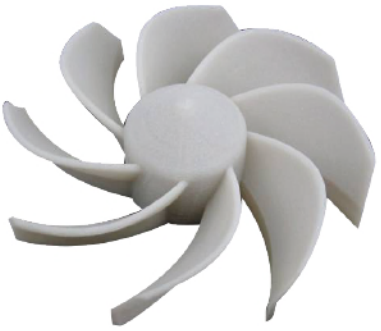

PA6-GF

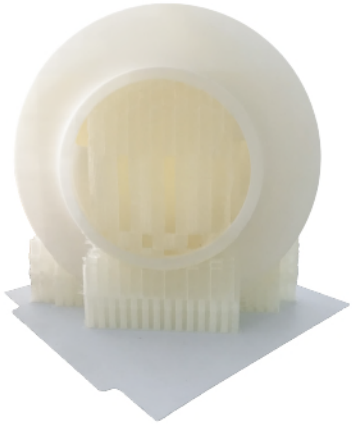

PLA-PVA Support

ABS

TPU

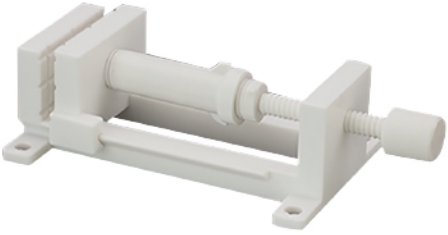

PETG

PC

ASA

Print Head

Dual extruder configuration

- Unique design of nozzle structure greatly reduces the risk of jam or leak.
- Dual extruder, dual color printing, dual material printing, support diversified printing needs.
- Cooling system for print head to prevent jam.

Annular heating design

- Annular hot end with 360° surround heating wire which can heating up to 410°C rapidly and uniformly.
- Hot end covered by high temperature shield for heat preservation.

Dual liftable nozzles

- The unique design of print head enable nozzles to move up and down(repeatability precision<0.004 mm), this stable and reliable mechanism avoid the scratch and damage between printing object and idle nozzle effectively.
- The nozzles can be lifted up to 5mm within 1/6 second (150000 times reliability test).

Easy-Swap nozzle kit

- Easy to replace, make nozzle maintenance more convenient.
- Repeatable disassembling design which enable frequently changeover among the nozzles with different diameter.

Nozzle Kit A
Copper-plated Nozzle

0.4mm/0.8mm/1.0mm

Especially perfect for high-temperature filaments like PEEK, but also compatible with normal filaments.

Nozzle Kit B
Hardened Steel Nozzle

0.4mm/0.8mm

Especiall perfect for abrasive composite filaments like copper,brass,steel,carbon fiber,glass fiber filled filaments.

PA-CF | PLA | ABS | PEEK | PC | PA-GF | ASA | PA | TPU

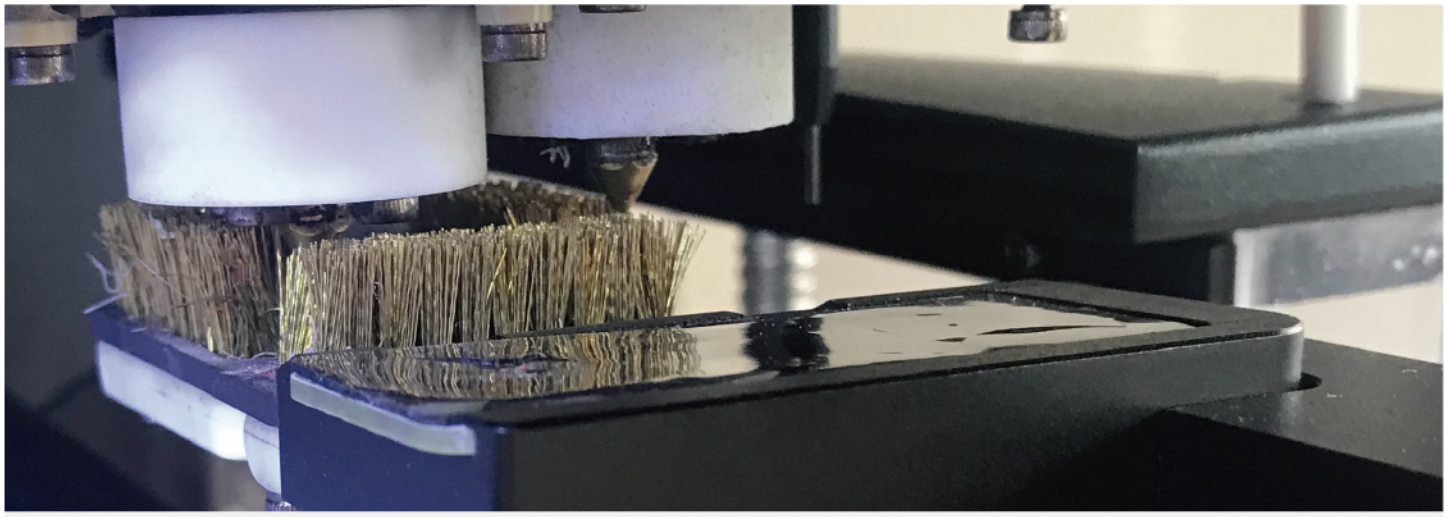

Nozzle Cleaning Device

Reliable dual extruder switching program helps to solve filament overflow issue.

Printer cleans the material residuals around the nozzle tip automatically which helps to improve printing quality.

X-Y-Z Axis Motion Structure

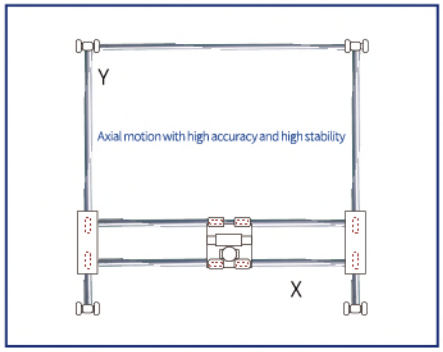

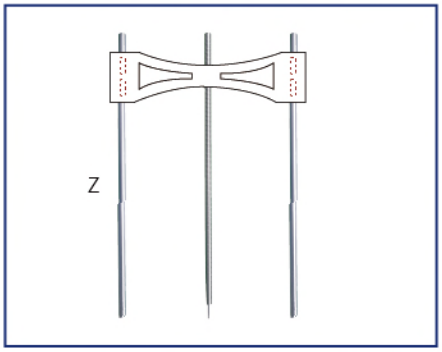

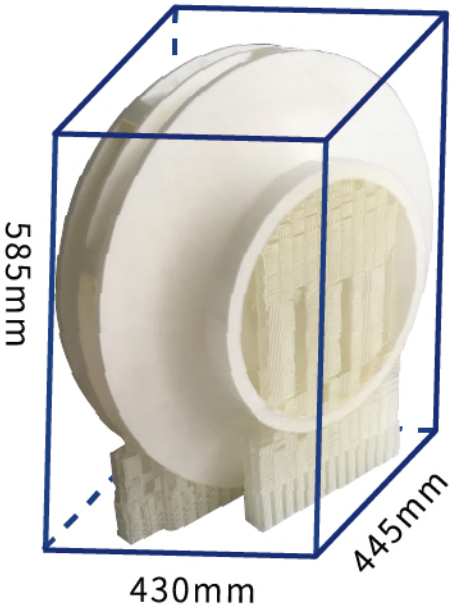

- Build volume (W*D*H): 445X430X585mm
- High resolution up to 0.01mm layer thickness
- Positioning accuracy: X axis: 0.004mm
  Y axis: 0.002mm
  Z axis: 0.001mm

Print Bed

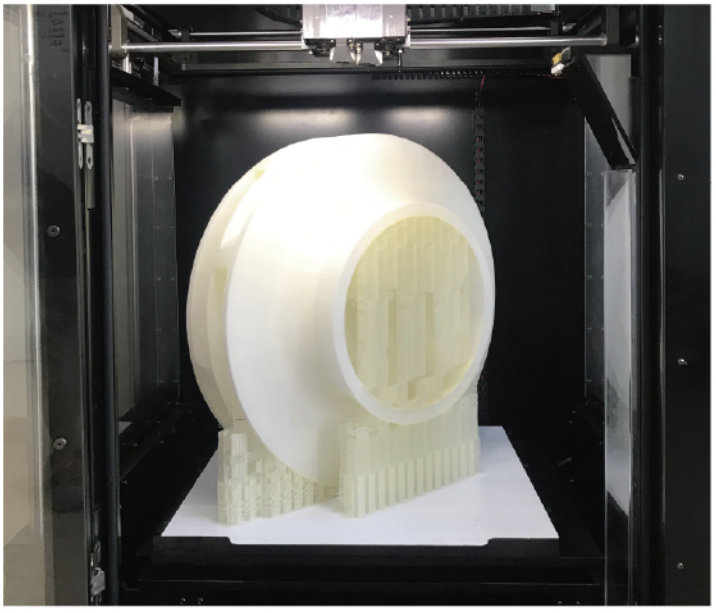

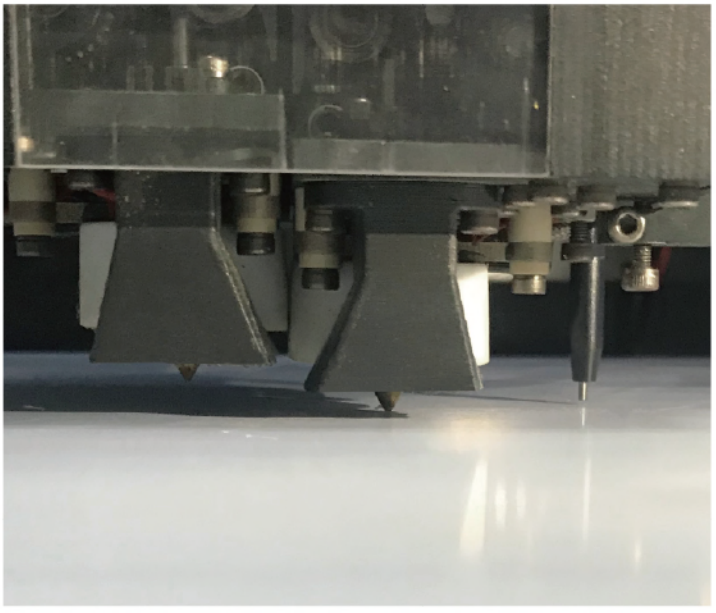

Enhanced electromagnetic locking system ensures print bed flat durably.

Print bed with programmed control, convenient to place and replace.

The flatness of print bed is measured automatically and the print base plate was calibrated and locked before shipping.

Heated bed: PID control, max. 160°C

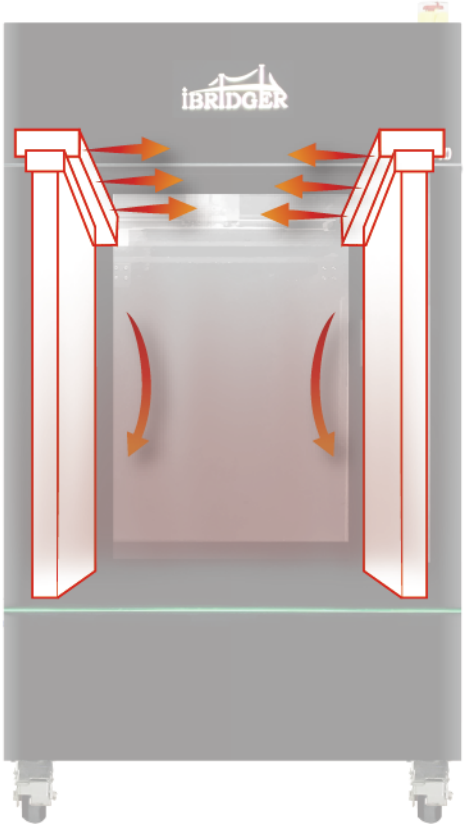

Thermostatic Chamber

Visualized transparent printing chamber

Sandwich type thermal isolation printing chamber with PID controller is able to control chamber temperature up to 90°C

HEPA Filter(optional)

Purify the air in the printing chamber and reduce odor during printing

Material Control

2 model filament bins, 2 support filament bins configuration, with filament run out sensor which enable the 2nd reel of filament to be fed automatically when the 1st reel run out, no printing interruption.

Primary plus auxiliary feeding extruders make filament feeding more stable.

Filament bin is designed with dehumidifier and adjustable heating plate (max controlled temperature: 75°C) which can dry the filament all the time.

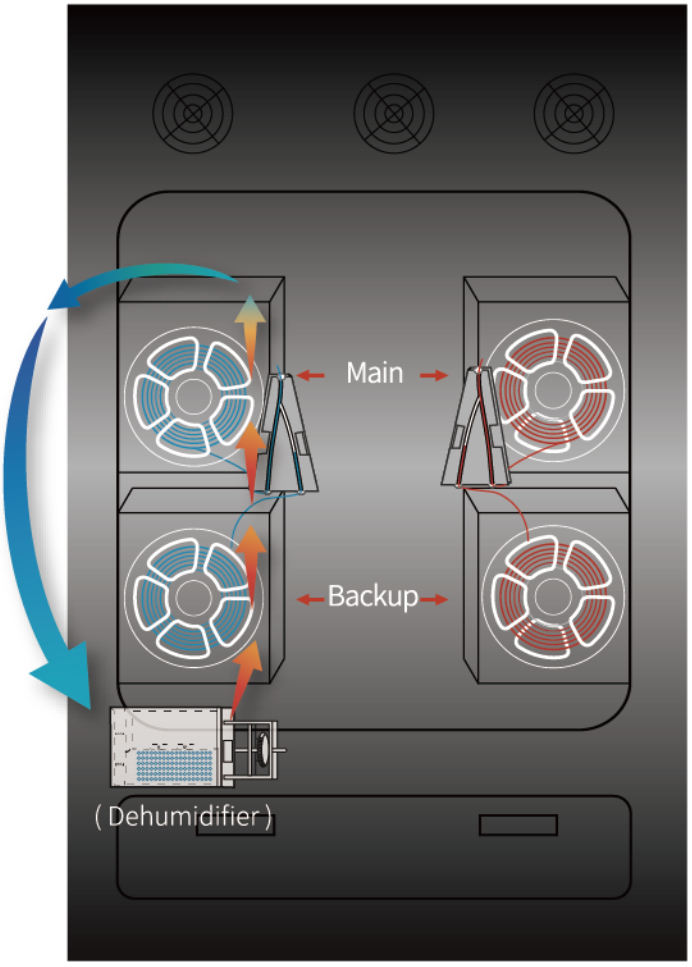

Motion Control

Dual processors, multi-channels data acquisition and multi controls.

Realize automatic switching between two level systems (host and slave computer) on calling on-board memory card.

ARM Cortex M3+ megaAVR, high speed/high stability control board.

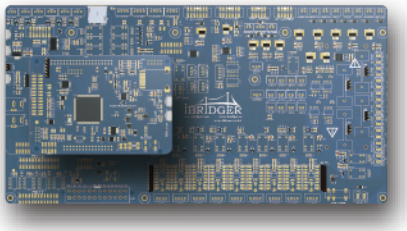

Closed loop monitoring on temperature, humidity, power consumption and motion status, enable to take protective action in case abnormal happens.

Dual filament feeders auto-switching drive system.

12 channels PID controllable DC high power output, maximum single channel output is up to 100W.

4 channels PID controllable AC high power output, maximum single channel output is up to 1500W (220V).

Operating and Monitoring

2

3

4

10.1 inch full color touch screen

Technological style user friendly GUI design makes the printer can be operated much easier.

Industrial grade camera

With built-in surveillance camera, the working status of the printer can be controlled either through app or by PC.

Data Sheet

Size	Build volume(W*D*H)	445X430X585mm
	Machine size	905X940X1630mm
	Gross Weight	342KG（220V）/358KG（110V）
Printer	Print technology	FDM
	Print bed	Electromagnetic locking machenism, spring steel with plastic print surface, pre-calibrated print bed
	Average working noise	50DB
	Number of nozzles	2
	Nozzle diameter	0.4mm(0.8mm/1.0mm optional)
	Nozzle working temperature	410°C (max)
	Chamber	PID 90°C (max)
	Heated bed	PID 160°C (max)
	Heated filament bin	75°C (max)
	Filament bin	4, 2 for model and 2 for support
	Filament type	PEEK,PETG,PA6-CF,PA6-GF,ABS,PC,PA,PLA,TPU,ASA...
	Filament diameter	1.75mm
	Positioning accuracy	X axis: 0.004mm Y axis: 0.002mm Z axis: 0.001mm
	Connection mode	USB / Wifi
	HEPA filter	Yes, Internal air circulation
	Print resume in case of power loss	Yes
	Filament run-out sensor	Yes
	Operating environment	Operation: temperature 15-30°C , humidity 30-70% RH Storage: temperature 0-55°C , humidity 10-90% RH
Software	Slicing software	Simplify 3D / CURA
	Support type	Auto / Manual
	Compatible file format	STL、OBJ
	System requirements	Windows 7 SP1 above, MacOS X10.10 above
Control System	Power	Factory preset, 110V or 220V(not compatible) Peak power 3KW
	User interface	10.1 inch touch screen
	Screen resolution	1280 X 800
	Logic controller	RK3288 1.6GHz
	Memory	2GB
	Onboard Flash	16GB
	OS	Android 5.0
	Ports	USB2.0
	Camera	Yes
	Language	English
	Motion controller	32 bit ARM Cortex M3 core

E-mail:sales@ibridger.com Facebook:leo.ibridger Website:www.ibridger.com